MODEL 10/22® CARBINE

INTERNATIONAL MODEL

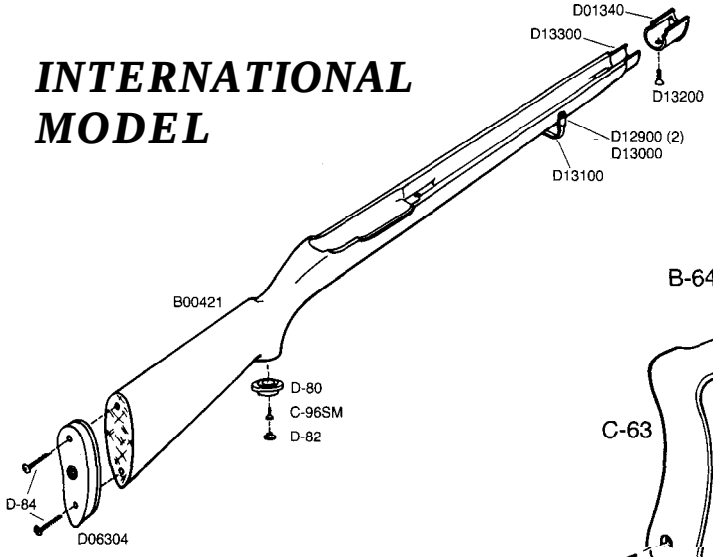

STANDARD MODEL

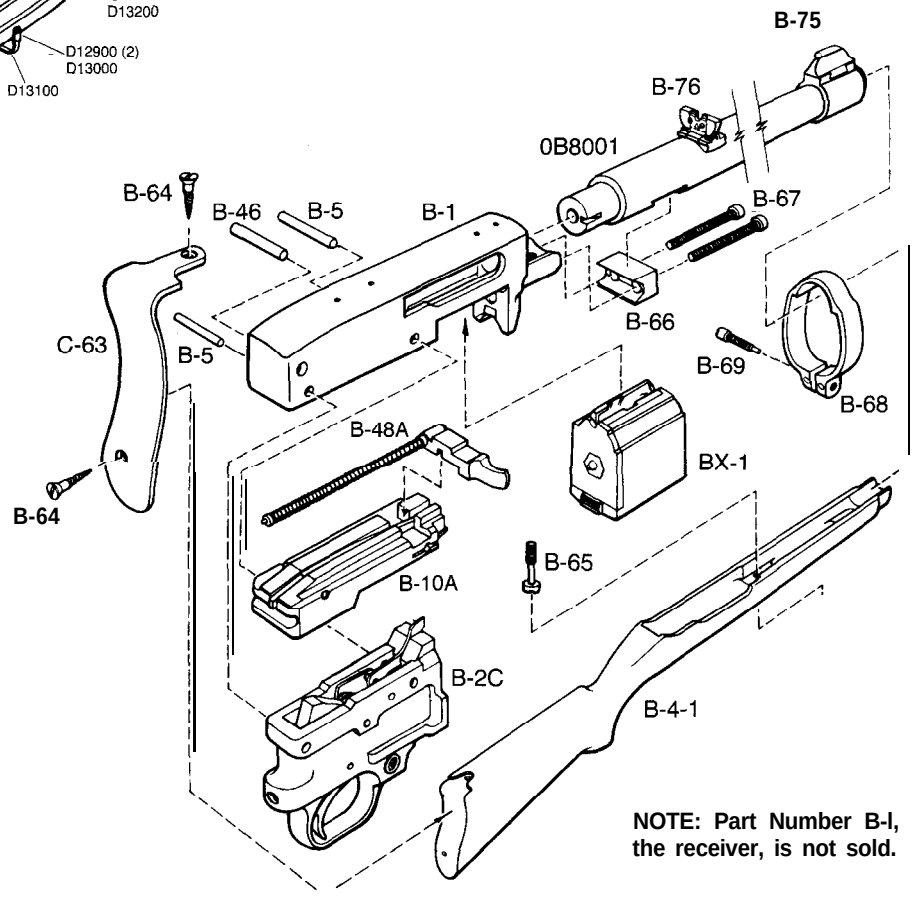

NOTE: Part Number B-l, the receiver, is not sold.

TRIGGER GUARD ASSEMBLY

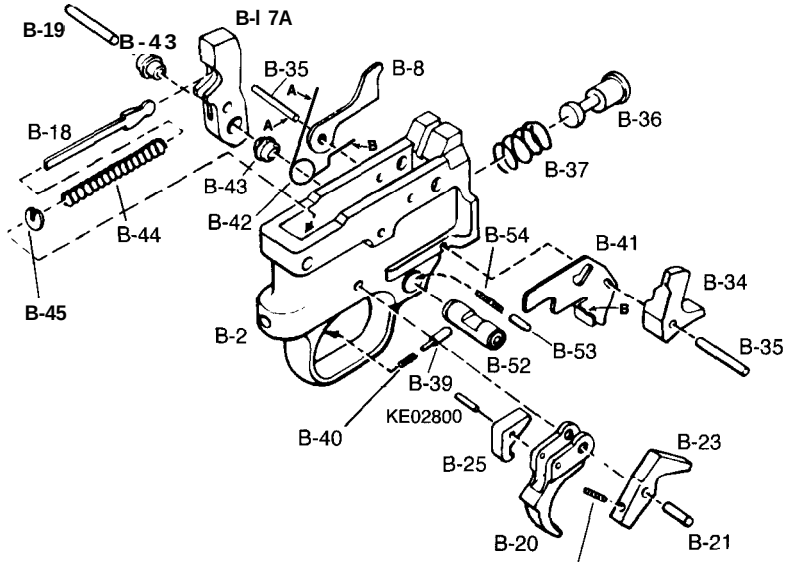
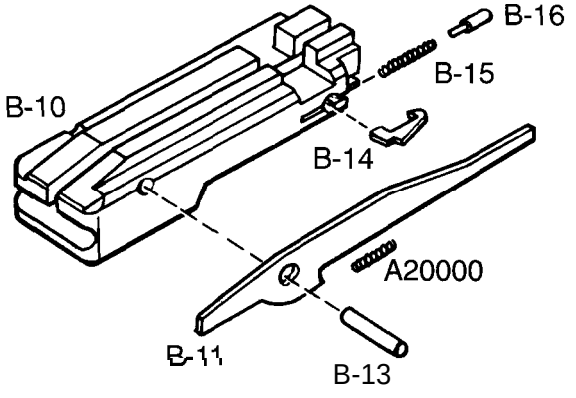
BOLT ASSEMBLY