RUGER 22/45
EXPLODED VIEW
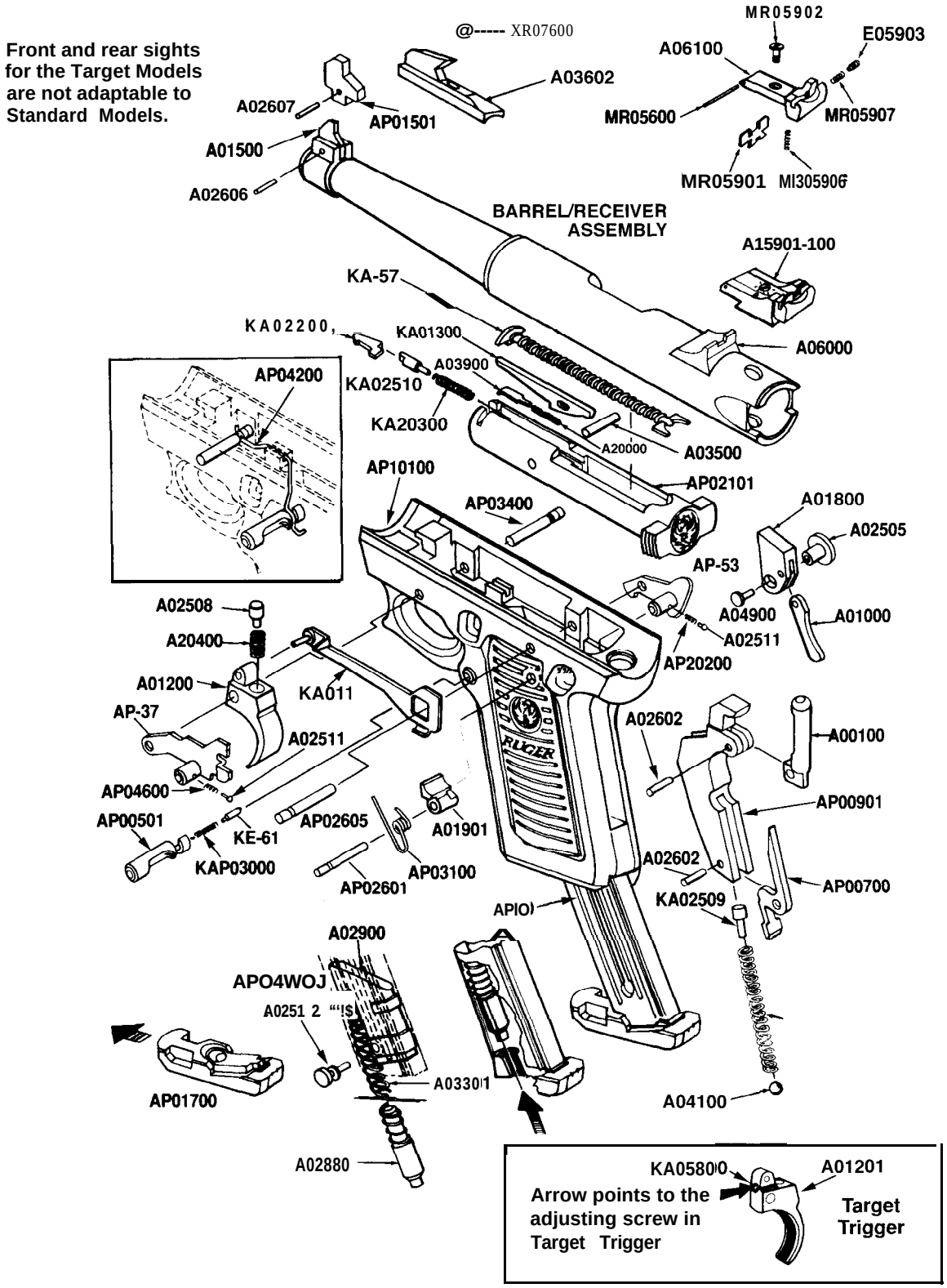
Note **B:** The Bolt Stop components in this group are for holding open the bolt and are not functionally related to the Bolt Stop Pin (AOOlOO and Bolt Stop Pin Pivot (A02602). These two later components are attached to the Mainspring Housing (AP00901). See parts drawing below for relationship of parts.